# Cubola form

## Cubola form in fireclass A60

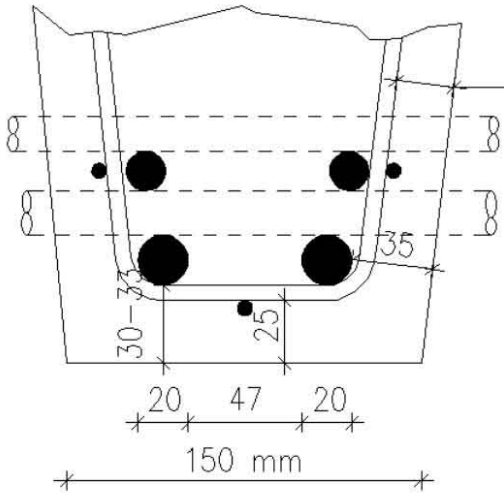


15+10=25 mm safety concrete
- welded bar works as one direction trussed plates main ribbed bar
- welded bar cage works also as "split net" in other direction
- Structure can be used in outside

## Cubola form in fireclass A90

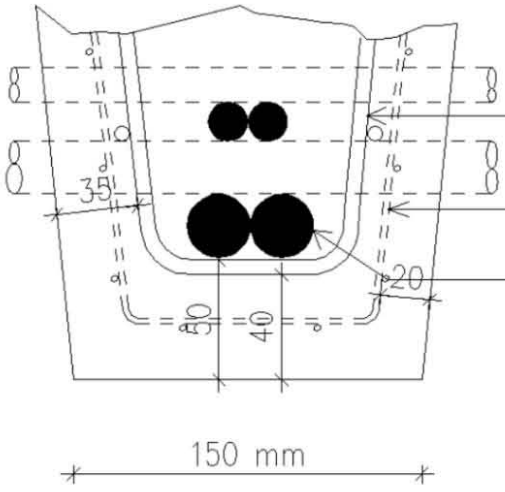


welded bar cage

afar "fire net"

main ribbed bars bundling

Fireclass A120 requires rib width 200 mm

FINN-FORM OY
Ahertajantie 6
15880 HOLLOLA/FINLAND

Puh. +358(0)3 780 5825
Fax. +358(0)3 780 5925

info@finnform.fi
www.finnform.fi